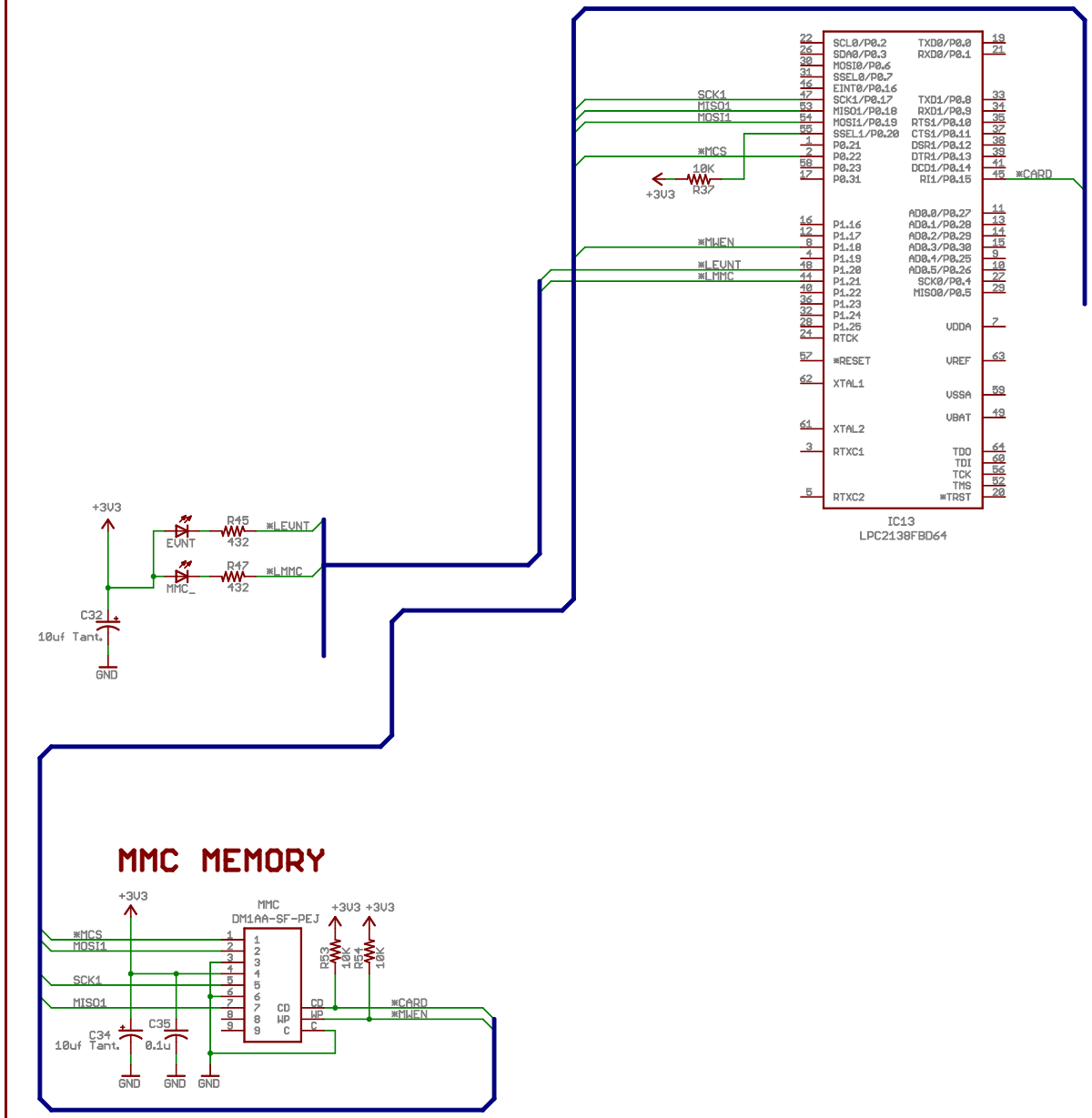

TITLE: foo

Document Number:

REV:

Date: 11/23/2005 09:10:38

Sheet: 3/4